1 | Overview

The B208 Octo-input Module is an 8 point supervised expansion device that connects to control panels through the SDI2 bus. This module communicates back to the control panel all point status changes. The inputs are accessed through on-board screw terminal connections. The on-board switches are used to specify module addresses.

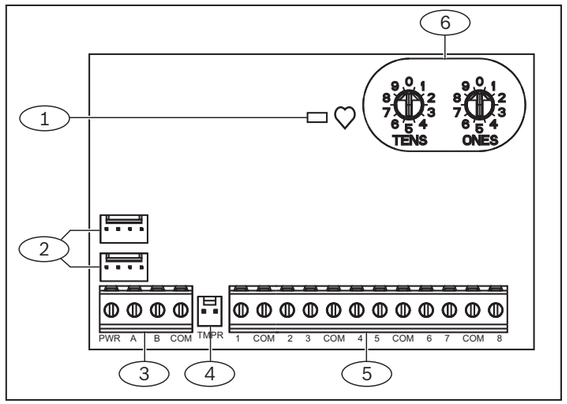

Figure 1.1: Board overview

Callout – Description
1 – Heartbeat LED (blue)
2 – SDI2 interconnect wiring connectors (to control panel or additional modules)
3 – SDI2 terminal strip (to control panel or additional modules)
4 – Tamper switch connector
5 – Terminal connector (point inputs)
6 – Address switches

2 | SDI2 address settings

Two address switches determine the address for the B208 Octo-input Module. The control panel uses the address for communications. The address also determines the output numbers. Use a slotted screwdriver to set the two address switches.

NOTICE!
The module reads the address switch setting only during power up. If you change the switches after you apply power to the module, you must cycle the power to the module in order for the new setting to be enabled.

Set the address switches per the control panel configuration. If multiple B208 modules reside on the same system, each B208 module must have a unique address.

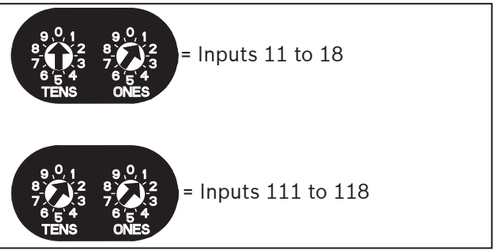

Figure 2.1: Address switches

The module's address switches provide a tens and ones value for the module's address. For single-digit address numbers 1 through 9, set the tens switch to 0 and the ones digit to the appropriate number. *Figure 2.1* shows the address switches setting for addresses 1 and 11.

2.1 | Valid addresses and input numbers per control panel

Valid B208 addresses are dependent on the number of points allowed by a particular control panel.

Control panel	Valid B208 addresses	Corresponding point numbers
B5512	01 - 04	11 - 18, 21 - 28, 31 - 38, 41 - 48
B4512	01 - 02	11 - 18, 21 - 28
D9412GV4	01 - 24	11 - 18, 21 - 28, 31 - 38, 41 - 48, 51 - 58, 61 - 68, 71 - 78, 81 - 88, 91 - 98, 101 - 108, 111 - 118, 121 - 127, 131 - 138, 141 - 148, 151 - 158, 161 - 168, 171 - 178, 181 - 188, 191 - 198, 201 - 208, 211 - 218, 221 - 228, 231 - 238, 241 - 247
D7412GV4	01 - 07	11 - 18, 21 - 28, 31 - 38, 41 - 48, 51 - 58, 61 - 68, 71 - 75
D7212GV4	01 - 03	11 - 18, 21 - 28, 31 - 38

To determine the point numbers for each address, multiply the address number by 10 for the base number, and then use numbers 1 through 8 in the ones place for the point numbers.

Examples
For B208 address **01** the point numbers for the input devices are 11 through 18:

Terminal no	1	2	3	4	5	6	7	8
Input no	11	12	13	14	15	16	17	18

For B208 address **11** the point numbers for the input devices are 111 through 118:

Terminal no	1	2	3	4	5	6	7	8
Input no	111	112	113	114	115	116	117	118

3 | Installation

After you set the address switches for the proper address, install the module in the enclosure, and then wire it to the control panel.

NOTICE!
Remove all power (AC and battery) before making any connections. Failure to do so might result in personal injury and/or equipment damage.

3.1 | Mount the module in the enclosure

Mount the module into the enclosure's 3-hole mounting pattern using the supplied mounting screws and mounting bracket. Refer to *Figure 3.1*.

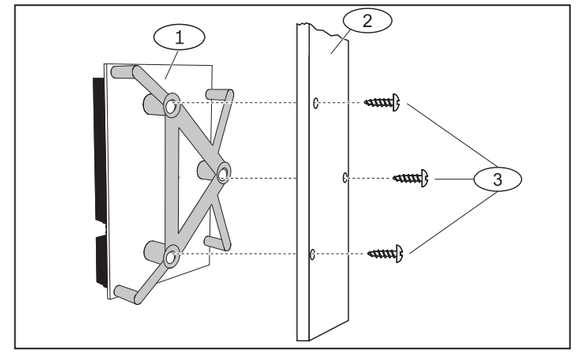

Figure 3.1: Mounting the module in the enclosure

Callout – Description
1 – Module with mounting bracket installed
2 – Enclosure
3 – Mounting screws (3)

3.2 | Mount and wire the tamper switch

You can connect an optional enclosure door tamper switch for one module in an enclosure.
Installing the optional tamper switch:

1. Mount the ICP-EZTS Tamper Switch (P/N: F01U009269) into the enclosure's tamper switch mounting location. For complete instructions, refer to *EZTS Cover and Wall Tamper Switch Installation Guide* (P/N: F01U003734).
2. Plug the tamper switch wire onto the module's tamper switch connector. Refer to *Figure 1.1*.

3.3 | Wire to the control panel

When you wire the module to a control panel, you can use either the module's terminal strip labeled with PWR, A, B, and COM, or the module's interconnect wiring connectors (wire included). Interconnect wiring parallels the PWR, A, B, and COM terminals on the terminal strip. *Figure 1.1* indicates the location of both the terminal strip and the interconnect connectors on the module. Refer to *Figures 3.2*, *3.3*, and *3.4*.

NOTICE!
Use either the terminal strip wiring **or** interconnect wiring connector to the control panel. Do not use both. When connecting multiple modules, you can combine terminal strip and interconnect wiring connectors in series.

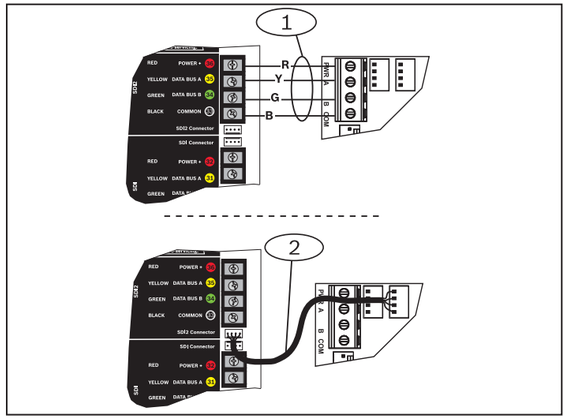

Figure 3.2: Using terminal strip or interconnect cable wiring D9412GV4 shown)

Callout – Description
1 – Terminal strip wiring (SDI2)
2 – Interconnect cable (P/N: F01U079745) (included)

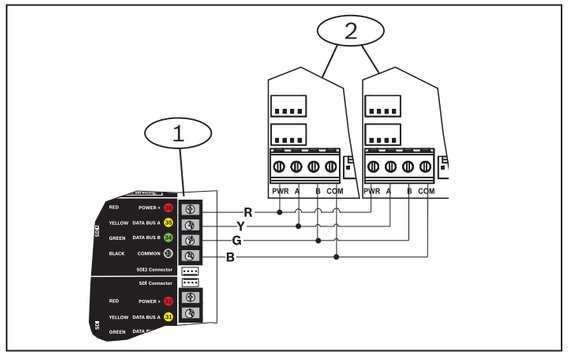

Figure 3.3: Installing multiple modules using the SDI2 terminal strip (D9412GV4 shown)

Callout – Description
1 – Bosch control panel
2 – B208 modules

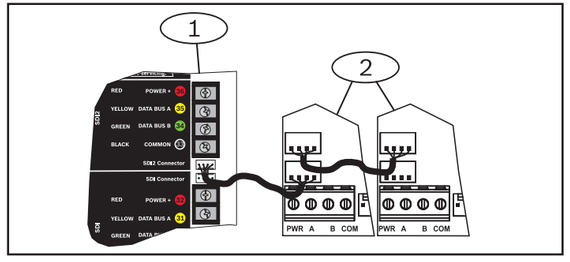

Figure 3.4: Installing multiple modules using the SDI2 interconnect wiring connector (D9412GV4 shown)

Callout – Description
1 – Bosch control panel
2 – B208 modules

3.4 | Sensor loop wiring

Wire resistance on each sensor loop must be less than 100 Ω with the detection devices connected. The terminal strip supports 12 to 22 AWG (0.65 to 2 mm) wires.
The B208 detects open, short, normal, and ground fault circuit conditions on its sensor loops and transmits the conditions to the control panel. Each sensor loop is assigned a point number and transmits to the control panel individually. Run wires away from the premises telephone and AC wiring.

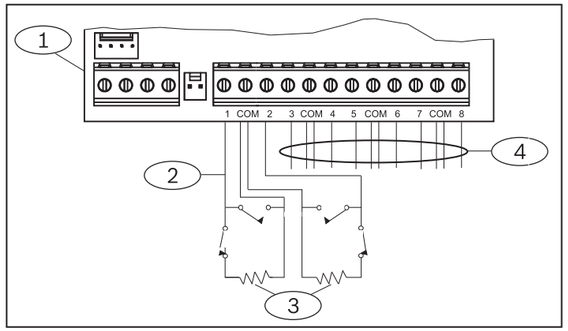

Figure 3.5: Installing sensor loop wiring

Callout – Description
1 – B208 module
2 – B208 sensor loops
3 – 1 kΩ EOL resistor (ICP-1K22AWG-10)
4 – Wiring to additional sensor loops

4 | LED descriptions

The module includes one blue heartbeat LED to indicate that the module has power and to indicate the module's current state. Refer to *Table 4.1*.

Flash Pattern	Function
Flashes once every 1 sec	Normal state: Indicates normal operation state.
3 quick flashes every 1 sec	Communication error state: Indicates (the module is in a "no communication state") resulting in an SDI2 communication error.
ON Steady	LED trouble state: Module is not powered (for OFF Steady only), or some other trouble condition prohibits the module from controlling the heartbeat LED.
OFF Steady	

Table 4.1: LED descriptions

5 | Show the firmware version

To show the firmware version using an LED flash pattern:
- If the optional tamper switch is installed:
With the enclosure door open, activate the tamper switch (push and release the switch).
- If the optional tamper switch is NOT installed:
Momentarily short the tamper pins.

Refer to *Figure 5.1* for an example of flash patterns.

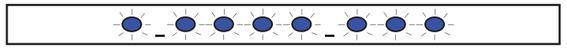

Figure 5.1: Firmware LED flash patterns

When the tamper switch is activated (closed to open), the heartbeat LED stays OFF for 3 sec before indicating the firmware version. The LED pulses the major, minor, and micro digits of the firmware version, with a 1 sec pause after each digit.

Flashing patterns do not start until the tamper is open (short is removed). In the following example, the version 1.4.3 shows as LED flashes:
[3 sec pause] *__****__*** [3 sec pause, then normal operation].

6 | Certifications

Region	
US	UL 365 - Police Station Connected Burglar Alarm Units and Systems
	UL 609 - Local Burglar Alarm Units and Systems
	UL 985 - Household Fire Warning System Units
	UL 1076 - Proprietary Burglar Alarm Units and Systems
	UL 1023 - Household Burglar-Alarm System Units
	UL 1610 - Central-Station Burglar-Alarm Units
	UL 864 - Control Units and Accessories for Fire Alarm Systems
	CSFM - California Office of The State Fire Marshal
	FCC Part 15 Class B
	FM Approval 3010
Canada	CAN/ULC-S304 Central and Monitoring Station Burglar Alarm Units
	ULC/ORD-C1023 Household Burglar Alarm System Units
	CAN/ULC-S303 Local Burglar Alarm Units and Systems
	ULC/ORD-C1076 Proprietary Burglar Alarm Units and Systems

7 | Specifications

Dimensions	2.5 in x 3.8 in x 0.60 in (63.75 mm x 96 mm x 15.25 mm)
Voltage (operating)	12 V nominal
Current (maximum)	35 mA
Operating temperature	+32°F to +122°F (0°C to +50°C)
Relative humidity	5% to 93% at +90°F (+32°C) non-condensing
Loop inputs	Up to eight inputs. Input contacts may be Normally Open (NO) or Normally Closed (NC) with 1k Ω EOL resistor(s) for supervision. **NOTICE:** Normally Closed (NC) is not permitted in Fire installations.
Loop End-of-Line (EOL) resistance	1k Ω
Loop wiring resistance	100 Ω maximum
Loop states	Short: 0 - 1.1 VDC Normal: 1.25 - 1.9 VDC Open: 2.25 - 5 VDC
Terminal wire size	12 AWG to 22 AWG (2 mm to 0.65 mm)
SDI2 wiring	Maximum distance - Wire size (Unshielded wire only): 1000 ft (305 m) - 22 AWG (0.65 mm) 1000 ft (305 m) - 18 AWG (1.02 mm)
Compatibility	B5512 (Up to 4 modules) B4512 (Up to 2 modules) D9412GV4 (Up to 24 modules) D7412GV4 (Up to 7 modules) D7212GV4 (Up to 3 modules)

Bosch Security Systems, Inc. product manufacturing dates
Use the serial number located on the product label and refer to the Bosch Security Systems, Inc. website at http://www.boschsecurity.com/datecodes/.

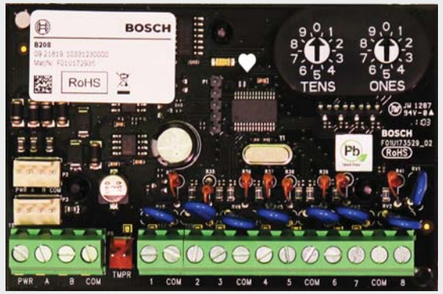

Octo-input Module

B208

BOSCH

en Installation Guide

Bosch Security Systems, Inc.
130 Perinton Parkway
Fairport, NY 14450
USA
www.boschsecurity.com

 F.01U.265.456 | 04 | 2013.12